0 603 339 703

Stand ~~01-08-30~~
Issue 10-05-05

Fig./Abb. 1

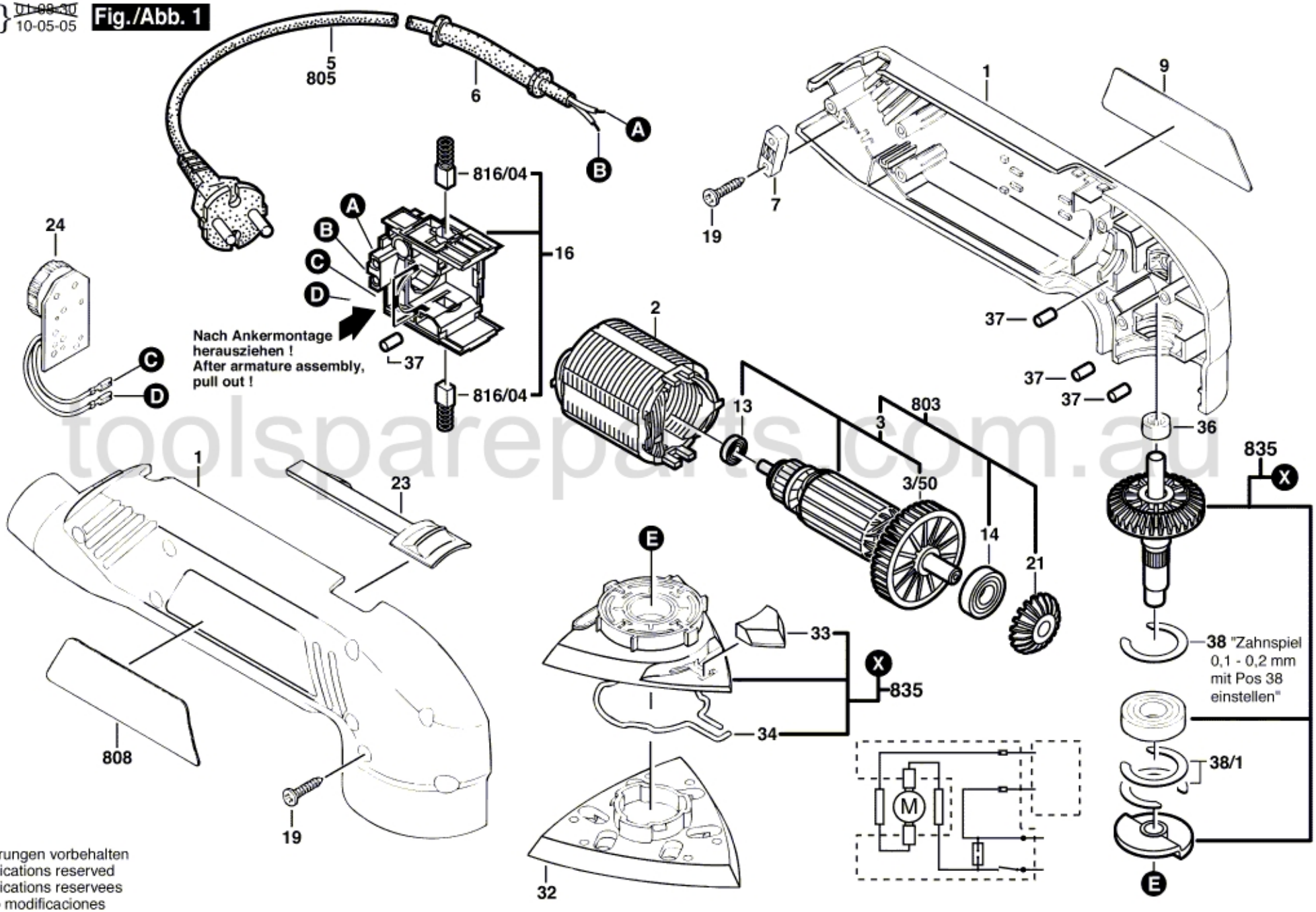

toolsparepart.com.au

Änderungen vorbehalten
Modifications reserved
Modifications reservees
Salvo modificaciones